ExoFit
Outdoor Fitness

Strength + Cardio Circuit

8 Users	7 Units

www.exo.fit | info@exo.fit | 800-527-0797

Strength + Cardio Circuit

8 Users	7 Units

Units

B	Fitness Bike
AW	Air Walker
ECT	Elliptical
SLP	2-Person Leg Press
SCP	Chest Press
PUDS	Push Up/Dip Station
SSUB	Sit Up Bench
SSGL	Rules Sign

Layout is for presentation purposes only - NOT INTENDED FOR CONSTRUCTION.
For more details, please contact ExoFit Outdoor Fitness.

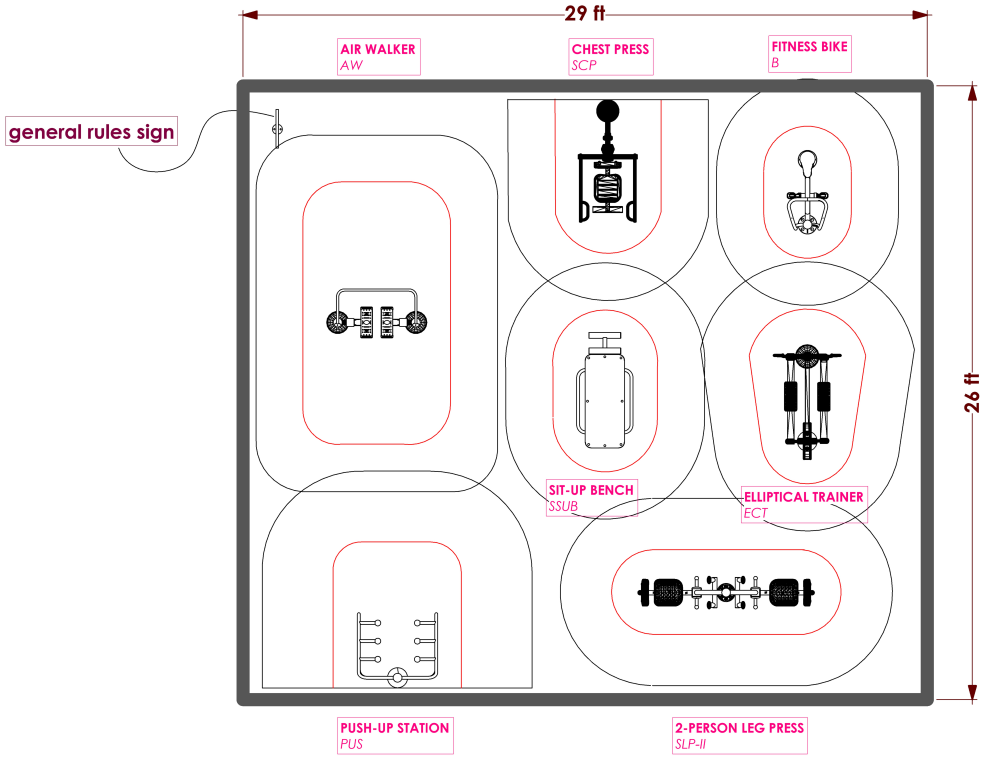

ExoFit
Outdoor Fitness

TOTAL SQUARE FEET:

754 SQ FT.

NO. OF USERS:

08

STRENGTH + CARDIO CIRCUIT

PROJECT NO:-	SCALE:- 3/16" =1'
DRAWN BY:-	PAPER SIZE:- B
DATE:- 01-JULY-2026	

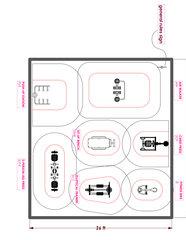
ExoFit
Exercise Equipment
Ground level
Elevated
Elevated
24 ft
24 ft
Ground level
Ground level
Elevated
Elevated
Ground level
Ground level
Ground level

Strength + Cardio Circuit

8 Users	7 Units

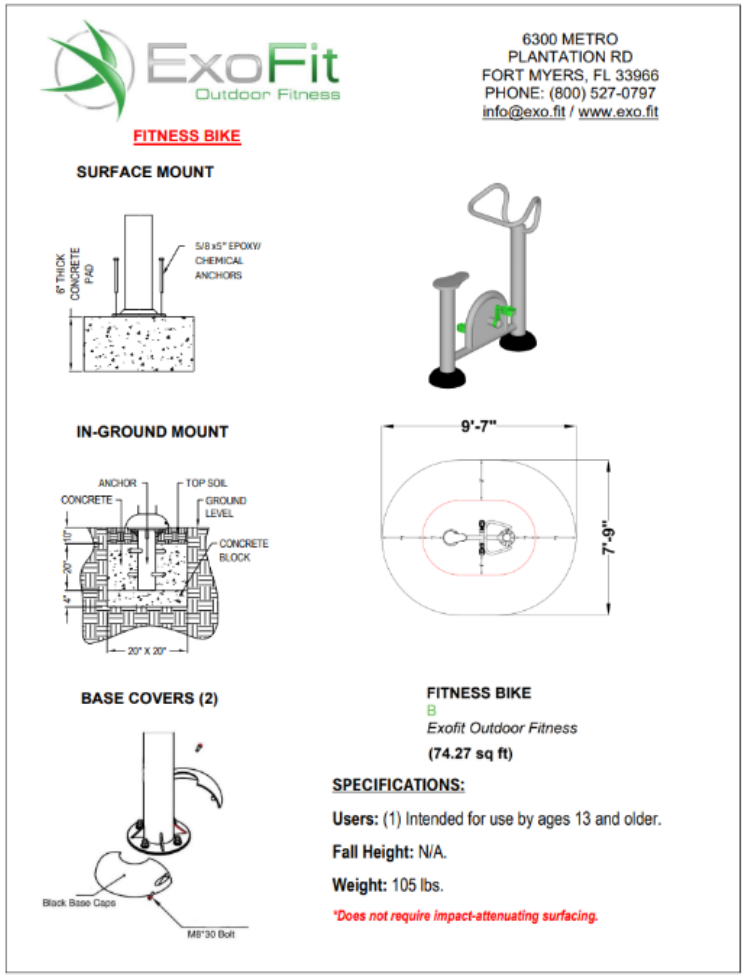

ExoFit Outdoor Fitness

6300 METRO PLANTATION RD
FORT MYERS, FL 33966
PHONE: (800) 527-0797
info@exo.fit / www.exo.fit

FITNESS BIKE

SURFACE MOUNT

IN-GROUND MOUNT

BASE COVERS (2)

FITNESS BIKE
B
Exofit Outdoor Fitness
(74.27 sq ft)

SPECIFICATIONS:

Users: (1) Intended for use by ages 13 and older.

Fall Height: N/A.

Weight: 105 lbs.

**Does not require impact-attenuating surfacing.*

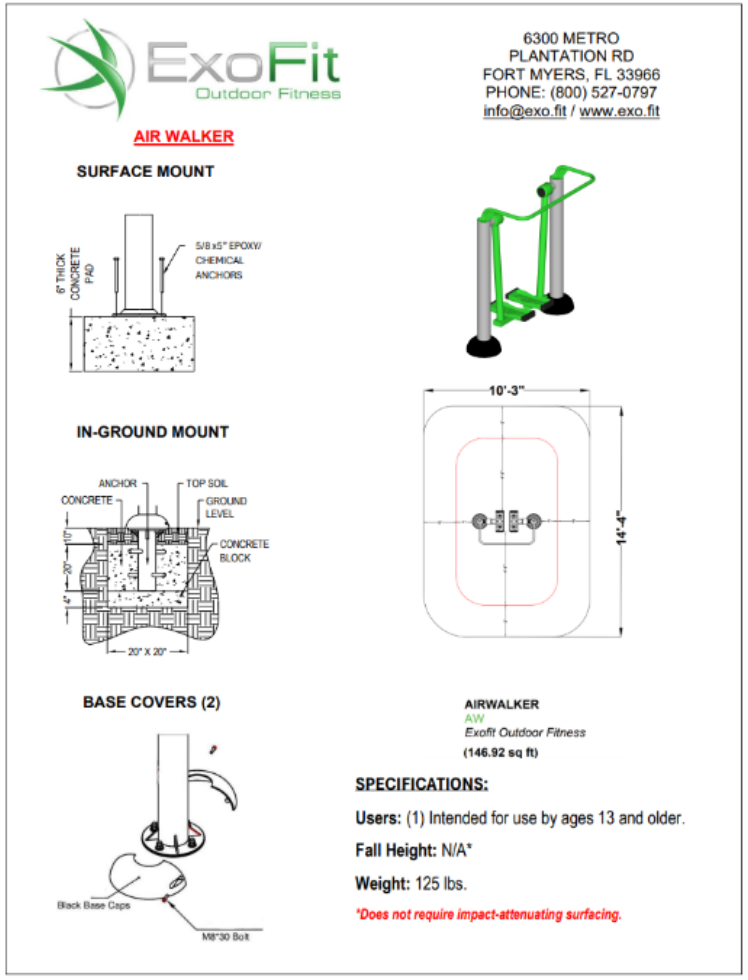

ExoFit Outdoor Fitness

6300 METRO PLANTATION RD
FORT MYERS, FL 33966
PHONE: (800) 527-0797
info@exo.fit / www.exo.fit

AIR WALKER

SURFACE MOUNT

IN-GROUND MOUNT

BASE COVERS (2)

AIRWALKER
AW
Exofit Outdoor Fitness
(146.92 sq ft)

SPECIFICATIONS:

Users: (1) Intended for use by ages 13 and older.

Fall Height: N/A*

Weight: 125 lbs.

**Does not require impact-attenuating surfacing.*

Strength + Cardio Circuit

8 Users	7 Units

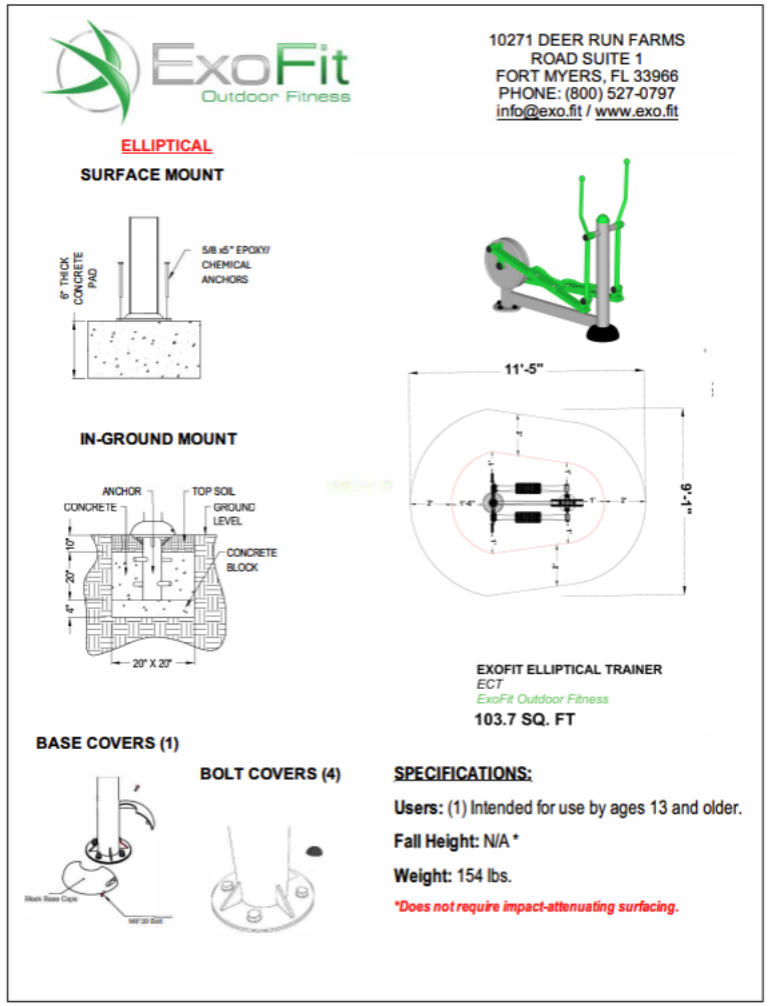

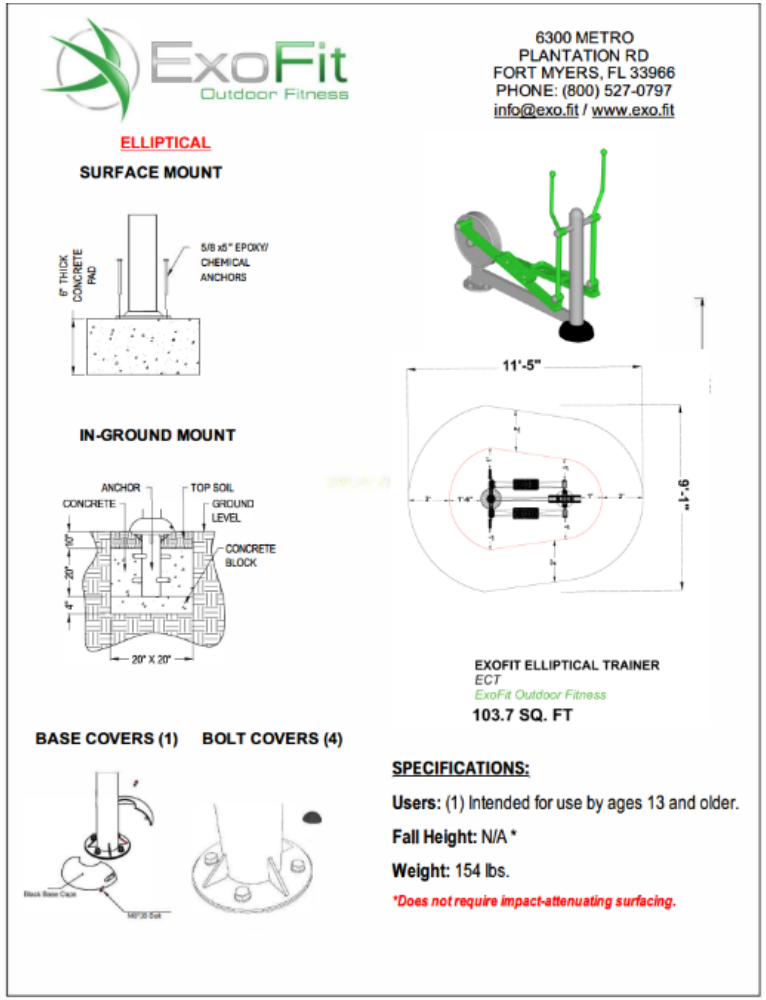

Strength + Cardio Circuit

8 Users	7 Units

ExoFit Outdoor Fitness

6300 METRO
PLANTATION RD
FORT MYERS, FL 33966
PHONE: (800) 527-0797
info@exo.fit / www.exo.fit

CHEST PRESS

SURFACE MOUNT

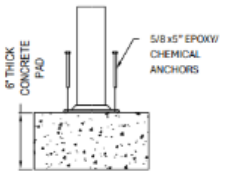

IN-GROUND MOUNT

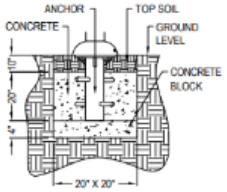

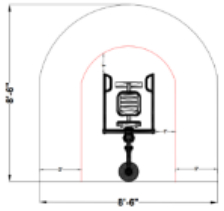

BASE COVERS (1)

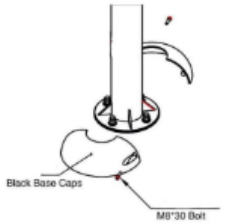

SINGLE CHEST PRESS
SCP
Exofit Outdoor Fitness
(72.25 sq ft)

SPECIFICATIONS:

Users: (1) Intended for use by ages 13 and older.

Fall Height: N/A*

Weight: 160 lbs.

**Does not require impact-attenuating surfacing.*

ExoFit Outdoor Fitness

6300 Metro Plantation Rd
FORT MYERS, FL 33966
PHONE: (800) 527-0797
info@exo.fit / www.exo.fit

SURFACE MOUNT

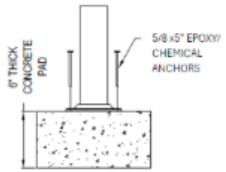

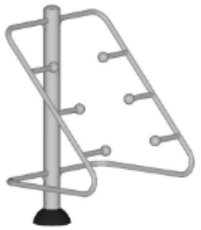

IN-GROUND MOUNT

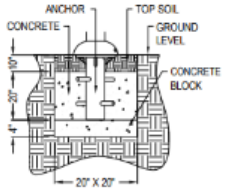

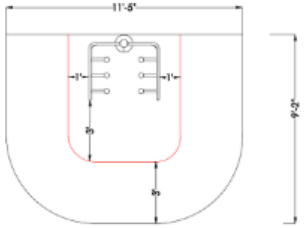

BASE COVERS (1)

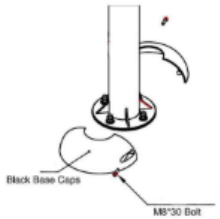

PUSH-UP STATION
PUS
Exofit Outdoor Fitness
(104.65 sq ft)

SPECIFICATIONS:

Users: (1) Intended for use by ages 12 and up.

Fall Height: N/A *

Weight: 95 lbs.

**Does not require impact-attenuating surfacing.*

Strength + Cardio Circuit

9 Users | 7 Units

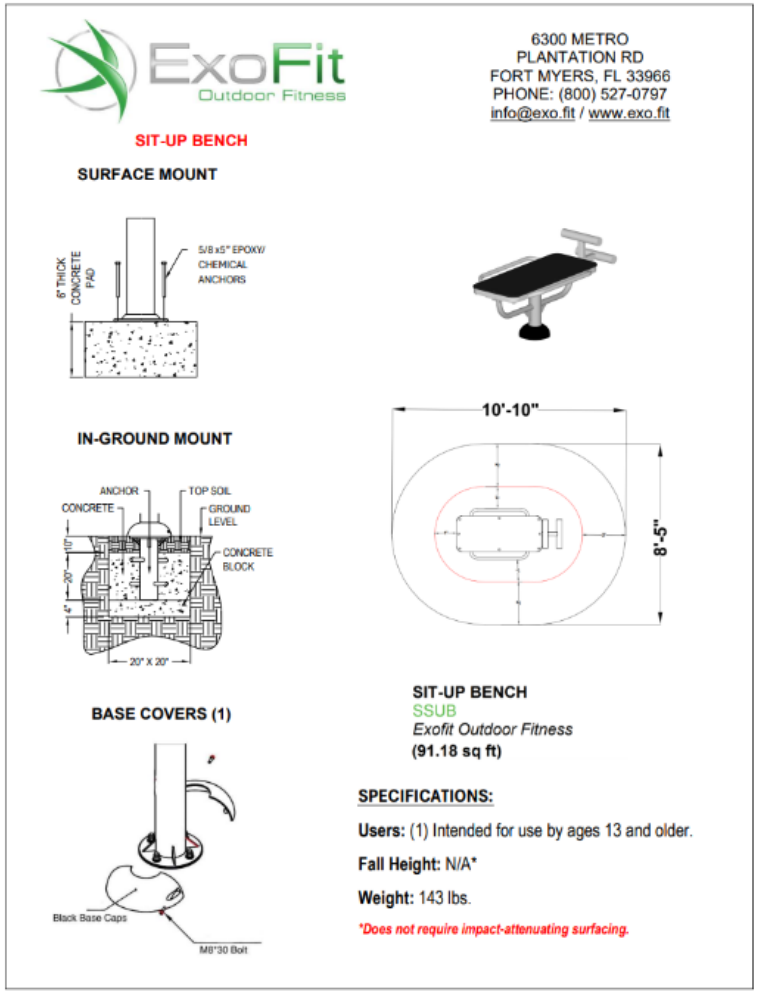

Strength + Cardio Circuit

9 Users	7 Units

ExoFit Outdoor Fitness

6300 METRO PLANTATION
FORT MYERS, FL 33966
PHONE: (800) 527-0797
info@exo.fit / www.exo.fit

Rules Sign -SSGL

SPECIFICATIONS:

- Printed on High Pressure Laminate (HPL)
- No Adhesive Layers
- Impervious to Moisture
- Thermally Stable
- High-Impact Resistant
- 10-year Warranty

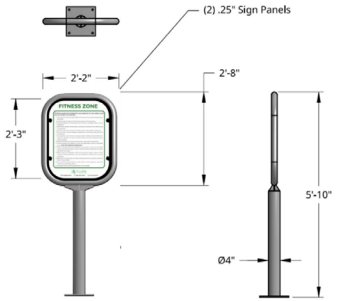

SURFACE MOUNT

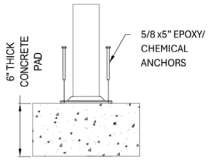

INGROUND MOUNT

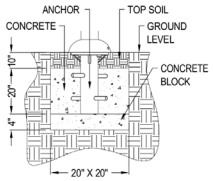

BASE COVERS (1)

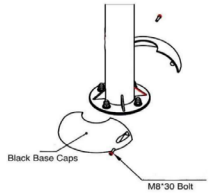

FITNESS ZONE

The fitness equipment is designed for your enjoyment. For your safety, we ask that you comply to the following:

1. You assume all risk and responsibility for the use of the exercise equipment at this facility.
2. Children under the age of 13 should stay away from this equipment.
3. Parents/Guardians: To avoid injuries, do not let your underage children use the equipment.
4. Remove any helmets, drawstrings, or accessories around the neck before using the equipment.
5. Be aware that there may be hot surfaces and/or surfacing before beginning.
6. Do not climb or allow climbing on equipment or structures unless that is its intended use.
7. Any potential users with known adverse health conditions should refrain from using this equipment. Consult a physician before starting any physical fitness training program.
8. Perform exercises according to instructions on each piece of equipment.
9. During exercise, pay attention to how your body feels. If pain or discomfort occurs, **STOP THE EXERCISE IMMEDIATELY.**
10. Perform resistance exercises according to instructions in a slow and controlled manner over the full range of motion. Performing the movements too quickly may result in an injury.
11. Before using the equipment, check for loose parts, breaks, cracks, or other conditions requiring attention. If any abnormalities are noticed, do not use the equipment.
12. Keep clear of moving parts and keep a safe distance from exercise equipment when in use by others.
13. Do not attach straps, bands or similar items to the equipment unless the intended use specifically allows it.
14. Supervision for the use of the equipment is not provided.

ExoFit Outdoor Fitness

Info@Exo.Fit 800-527-0727 www.Exo.Fit

Area Enhancements

Inclusive Fitness For Your Community!

Units

DC	Wheelchair Accessible Chest Press/Lat Combo
DAPB	Wheelchair Accessible Arm/Foot Wheel
DTCS	Wheelchair Accessible T'ai Chi Spinners

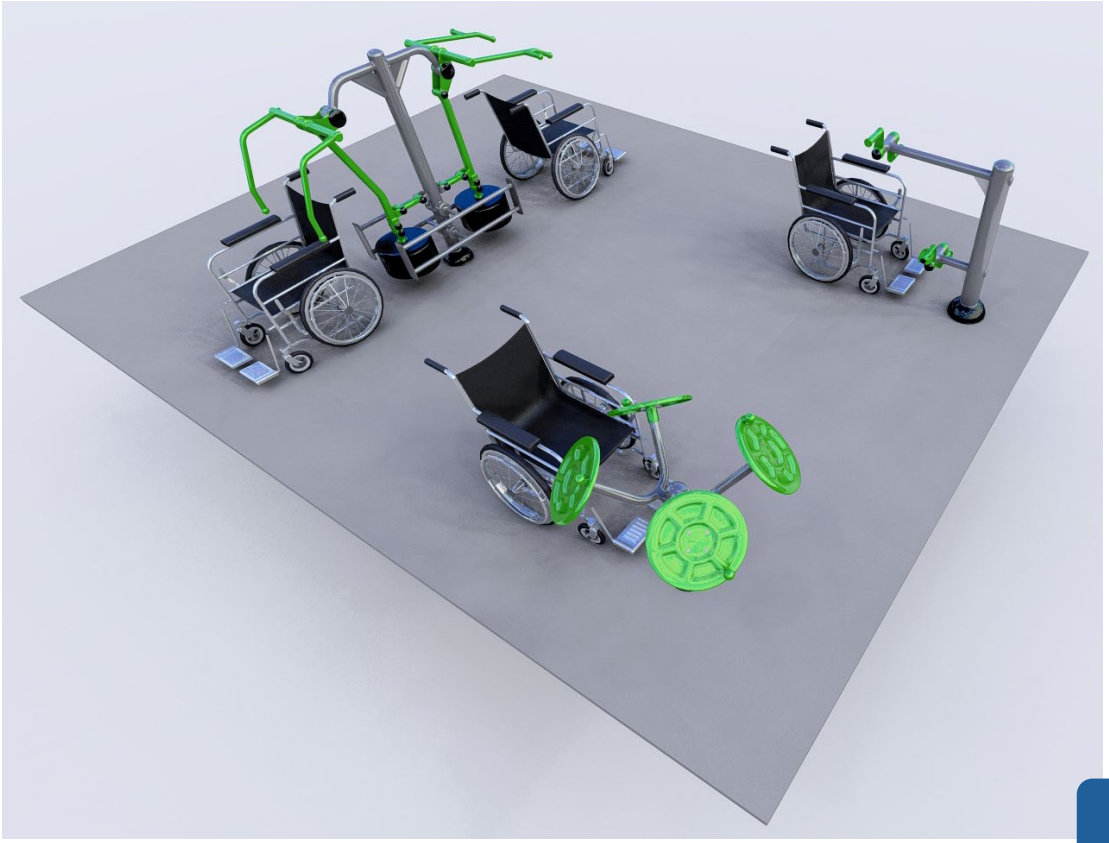

Warranty

Limited 25-year warranty on main post.
Limited 5-year warranty on seats and backrests.
Limited 5-year warranty on moving parts and bearings.
Limited 3-year warranty on hydraulic pistons.
Limited 2-year warranty on any rubber or other plastic parts.

All warranties cover failure due to manufacturing defects. This warranty does not cover normal wear and tear, such as scratches or dents caused by normal use, or any normal level of rusting due these.

Warranty is only valid if the equipment is installed and maintained in conformity to ExoFit's installation and maintenance procedures furnished by ExoFit Outdoor Fitness.

SUPPORT

Upon written notification to ExoFit of a product's failure to conform to any the afore mentioned warranties during the applicable period.
ExoFit shall ship the required part(s) to the site free of charge but will not be responsible for providing the labor of cost of labor for removing defective part(s) or installing replace part(s).
ExoFit's will warranty the replacement part(s) for the balance of the original warranty period.
Furthermore, no representation, oral or written, of any individual may be substituted for this exclusive limited warranty. To the extent permitted by law. ExoFit shall not be liable for any direct, indirect, special incidental or consequential damages, which are expressly excluded from the sale of its product.